Зип Общепит
vsezip.ru
+7(812)987-08-81

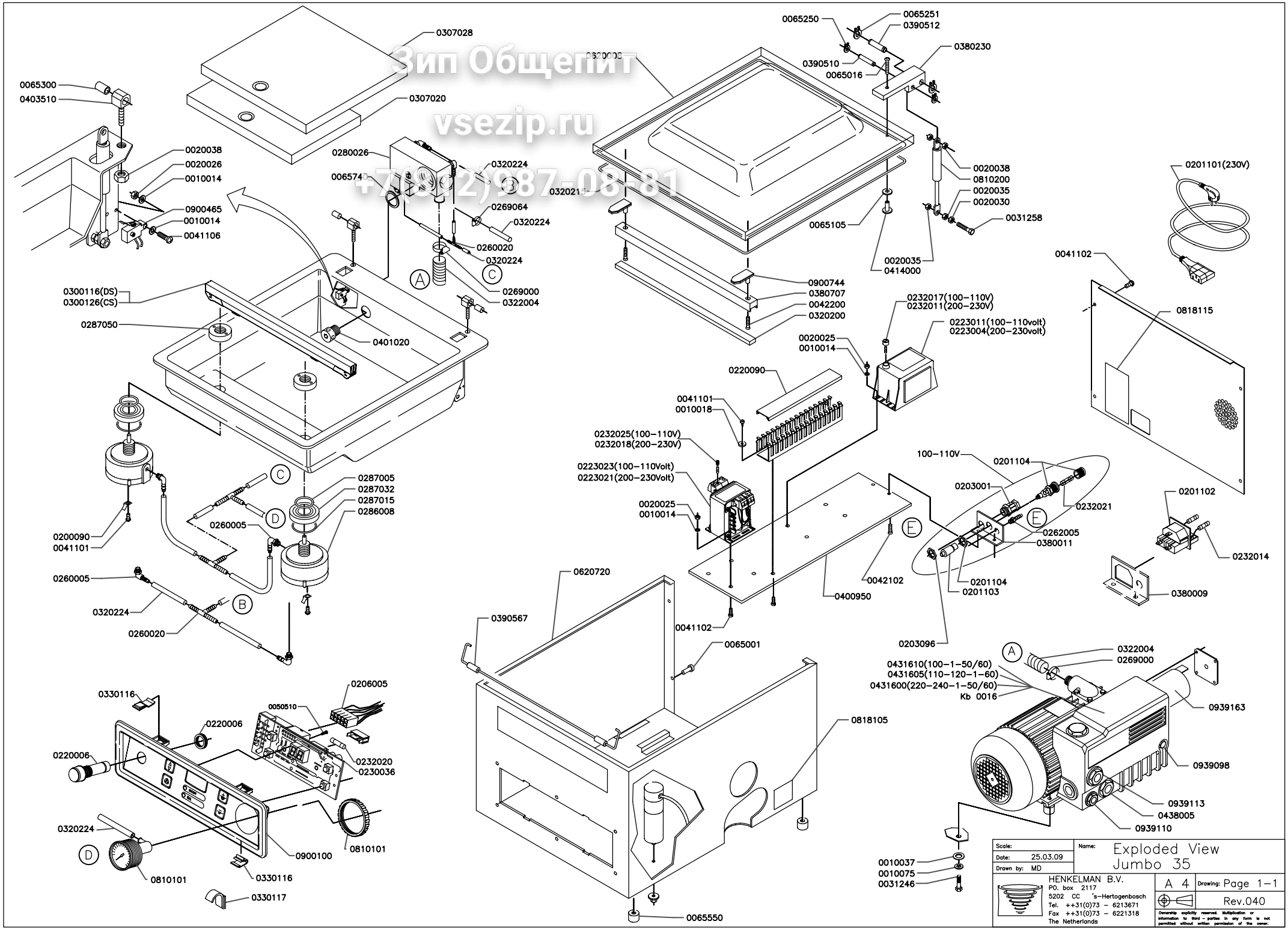

Scale:	Name: Exploded View Jumbo 35
Date: 25.03.09	
Drawn by: MD	
HENKELMAN B.V. PO. box 2117 5202 CC 's–Hertogenbosch Tel. ++31(0)73 – 6213671 Fax ++31(0)73 – 6221318 The Netherlands	A 4 Drawing: Page 1–1
	Rev.040

Ownership explicitly reserved. Multiplication or information to third – parties in any form is not permitted without written permission of the owner.